Current part is item (2) on diagram. Available at www.oshkoshequipment.com

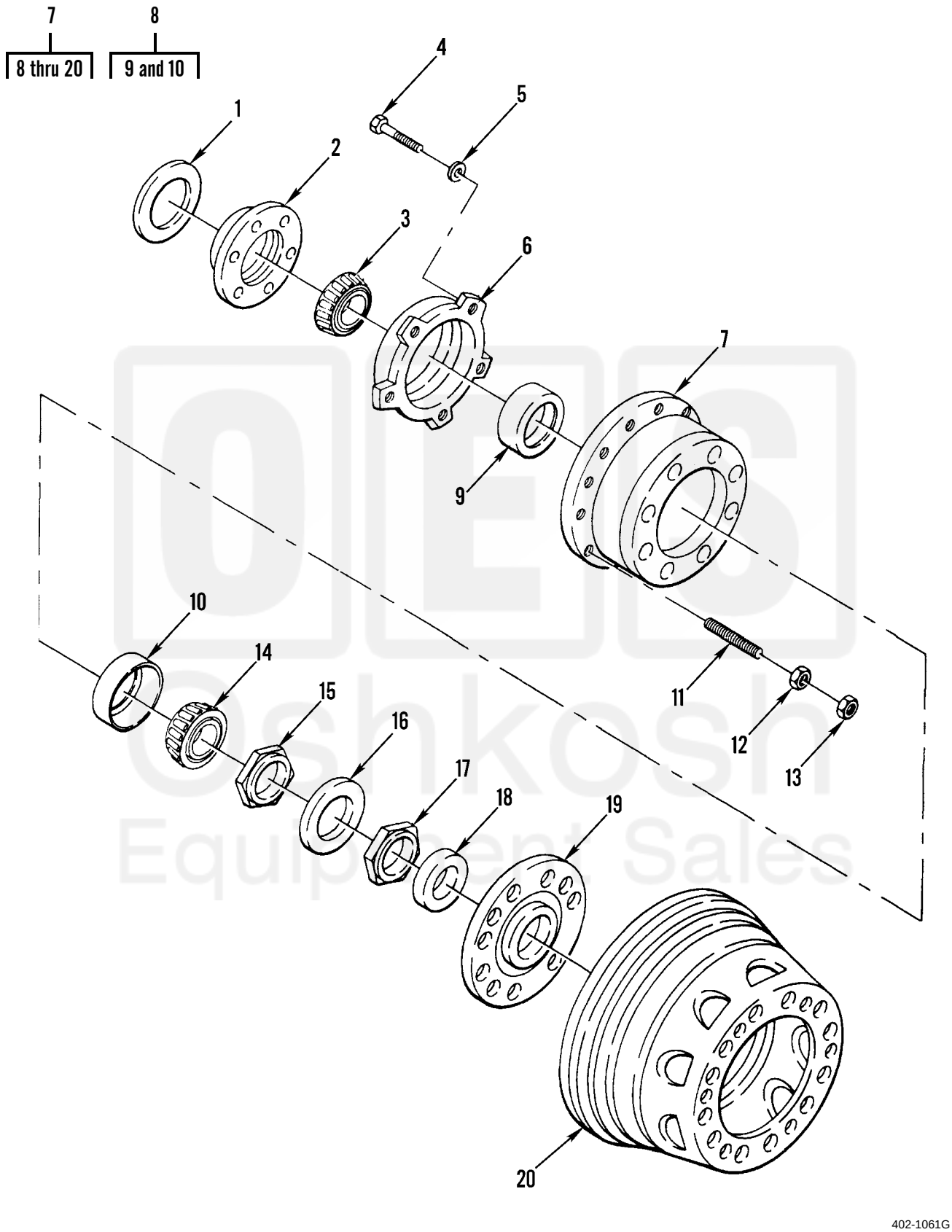

Figure 142. Forward Rear Axle Hub and Drum Assembly

Current part is item (2) on diagram. Available at www.oshkoshequipment.com

Current part is item (2) on diagram. Available at www.oshkoshequipment.com

GROUP 1311 WHEEL ASSEMBLY

FIG. 142 FORWARD REAR AXLE HUB AND DRUM ASSEMBLY

(1) ITEM NO	(2) SMR CODE	(3) NSN	(4) CAGEC	(5) PART NUMBER	(6) DESCRIPTION AND USABLE ON CODES(UOC)	(7) QTY
1	PAOZZ	2590007706746	78500	1199E1669	RING,WIPER.....	1
2	PAOZZ	5330004095771	62265	839495	SEAL,OIL.....	1
3	PAOZZ	3110002273719	3D6E9	598A	CONE AND ROLLERS,TA.....	1
4	PAOZZ	5305013571656	3D6E9	S255Z	SCREW,CAP,HEXAGON H.....	5
5	PAOZZ	5310000791974	19207	11601651	WASHER,FLAT.....	1
6	PAOZZ	2520011427913	3D6E9	3286-C-445	DEFLECTOR,DIRT AND.....	1
7	PAOOO	2530010829689	78500	A65-333-Q-2331	BRAKE DRUM ASSEMBLY L.H.....	1
7	PAOOO	2530010832129	78500	A66-333-Q-2331	HUB AND DRUM ASSEMB R.H.....	1
8	PAOZZ	2530010832128	78500	A1-333-Q-2331	.HUB AND STUD ASSEMB L.H.....	1
8	PAOZZ	2530010832130	78500	HRRA00TC6	.HUB AND STUD ASSEMB R.H.....	1
9	PAOZZ	3110001000329	02413	572	..CUP,TAPERED ROLLER.....	1
10	PAOZZ	3110001424390	60038	592A	..CUP,TAPERED ROLLER.....	1
11	PAOZZ	5307010328634	78500	20-X-1463	.STUD,PLAIN L.H.....	10
11	PAOZZ	5307010328635	78500	20-X-1464	.STUD,PLAIN R.H.....	10
12	PAOZZ	5310001958969	3D6E9	1199J114	.NUT CAP ASSEMBLY.....	10
13	PAOZZ	5310001619964	3D6E9	1199N118	.NUT,CAP PUTER R.H.....	10
13	PAOZZ	5310012705463	58536	A52427-L-1.125	.NUT,PLAIN,SINGLE BA L.H.....	10
14	PAOZZ	3110001000643	60038	580	.CONE AND ROLLERS,TA.....	1
15	PAOZZ	2520009177434	78500	R002303	.NUT,WHEEL BEARING.....	1
16	PAOZZ	5310003219974	K4998	1229U1009	.WASHER,KEY.....	1
17	PAOZZ	5310012544255	78500	R002305	.NUT,PLAIN,HEXAGON.....	1
18	PAOZZ	3950008078131	78500	A1199S1917	.WIPER.....	1
19	PAOZZ	5330008078123	3D6E9	A1205N612	.SEAL ASSEMBLY,BEARI.....	1
20	PAOZZ	2530010831055	29222	16797	.BRAKE DRUM.....	1

END OF FIGURE

Current part is item (2) on diagram. Available at www.oshkoshequipment.com